VIVA FITNESS

Owner Manual For Motorized Treadmill

T99

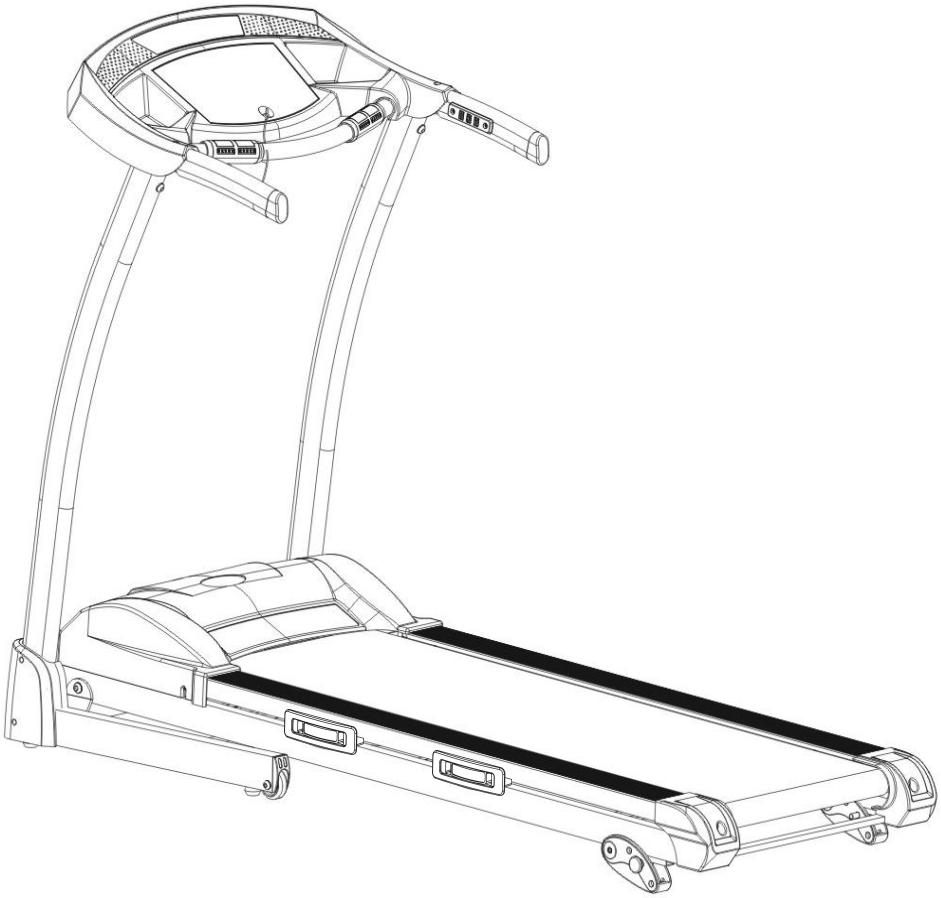

★ **Please read all precautions and instructions in this manual before in detail before using this equipment. Save this manual for future reference.**

CONTENTS

Contents	1
Safety Caution	2-3
Assembly instruction	4-6
Operation guide	7-11
How to fold and move	12
Suggested stretches	13-14
Maintenance	15-16
Exploded drawing	17
Part list	18
Trouble shooting guides	19-20

SAFETY CAUTIONS

When using this product, basic precautions should always be followed, including the following:

Please read the instruction carefully before starting to use this product.

Danger – To reduce the risk of electric shock：

1. Always unplug this product from the electrical outlet immediately after using and before cleaning.

Warning – To reduce the risk of burns, fire, electric shock, or physical injury：

1. The product should never be left unattended while plugged in. Unplug the product from the outlet when not in use.
2. Close supervision is necessary when this product is used by or near children, invalids, or disabled persons.
3. Be sure to use the product only for its intended use as described in this manual. Do not use any attachment not recommended by the manufacturer in order to avoid any danger or accidents.
4. Never operate the product if it has a damaged cord or plug, if it is not working properly, if it has been damaged, or dropped into water. Please return the product to the service center of seller for examination and repair.
5. Do not carry this product by the supply cord or use the cord as a handle.
6. Keep the cord away from hot surfaces or ground.
7. Never operate the product with the air vents blocked. Keep the air vents free of lint, hair, etc.
8. Never drop or insert any objects into any openings.
9. Do not use or operate outdoors.
10. Do not operate where aerosol (spray) products are being used or where oxygen is thin.
11. Before turning the product power off, turn all controls to the off position then remove the plug from the outlet.
12. Connect the product to a properly grounded outlet only.
13. If the treadmill is foldable, when user finishes using the treadmill, the elevation needs to be back to original position.
14. When user is using the treadmill, it can not be folded at the same time.
15. Keep a safety zoom of 2000mm x 1000mm away from the treadmill.
16. This machine is only intended for household use.
17. For the treadmill with folding function and electric elevation, be sure that the elevation is 0 before folding (To avoid interference of the components).
18. Stop using the treadmill if you feel faint, dizzy, or short of breath.
19. Wear appropriate exercise clothes when using the treadmill. Do not wear loose clothes that could become caught in the treadmill. Athletic support clothes are recommended for both men and women. Always wear athletic shoes. Never use the treadmill with bare feet, wearing only stockings, or in sandals.

GROUNDING INSTRUCTIONS

The products must be grounded first. If malfunction or breakdown occurs, grounding will provide a path of least resistance for electric current to reduce the risk of electric shock.

The product is equipped with a cord having an equipment-grounding conductor and a grounding plug.

The plug must be plugged into an appropriate outlet that is properly installed and grounded in accordance with all local codes and ordinances.

Danger – Improper connection of the equipment-grounding conductor can result in a risk of electric shock. Check with a qualified electrician or serviceman if you are in doubt as to whether the products are properly grounded. Do not modify the plug provided with the product – if it will not fit the outlet, have a proper outlet install by a qualified electrician.

The products is for use on nominal 220-240 volt and has a grounding plug that looks like the plug illustrated in the figure . Make sure that the product is connected to an outlet having the same configuration as the plug.
There is no need to use any adapter for this product.

Figure
Grounding methods

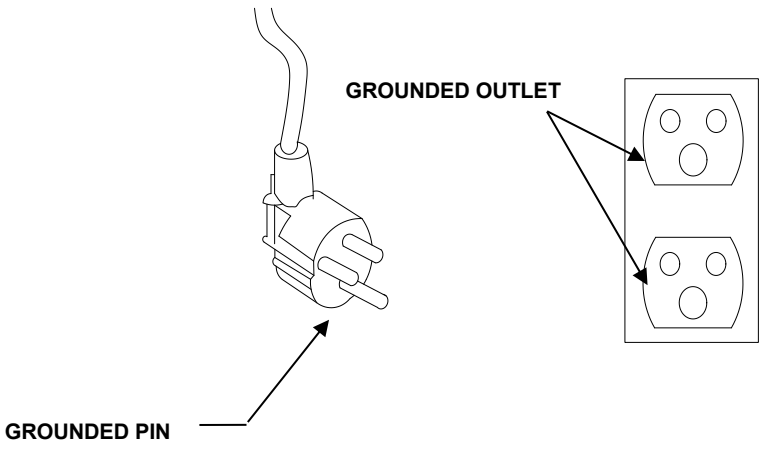

ASSEMBLY INSTRUCTIONS

OPEN THE BOX YOU CAN FIND THE ALL PARTS AS BELOW.

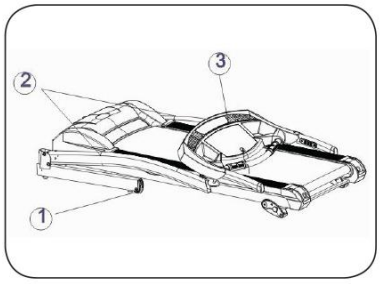

Main frame x 1

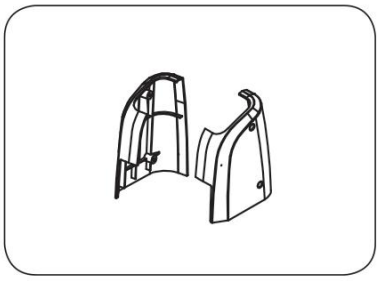

Base cover x 2

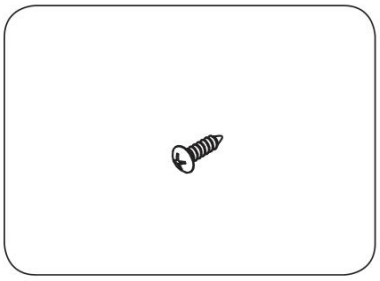

Screw m4*15

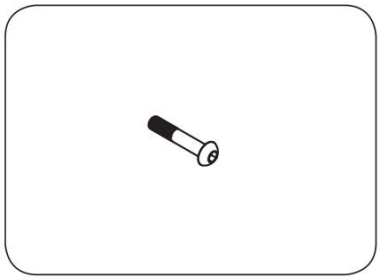

Bolt m8*15 x 4

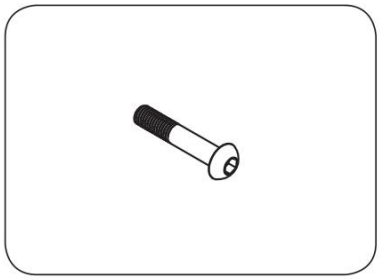

Bolt m8*45 x 2

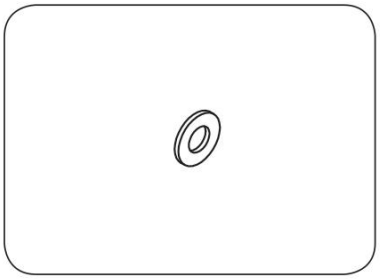

Washer m10 x 2

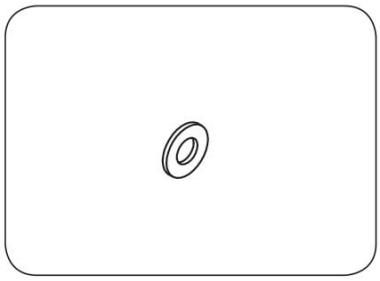

Washer x 4

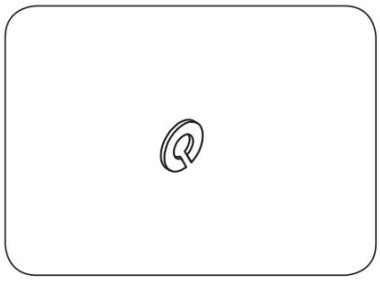

Washer x 2

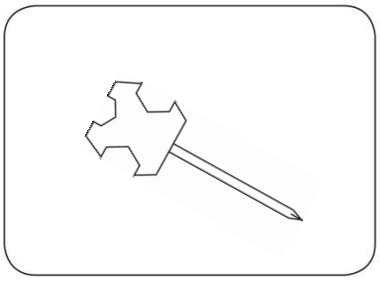

Screw driver and
Wrench x 1

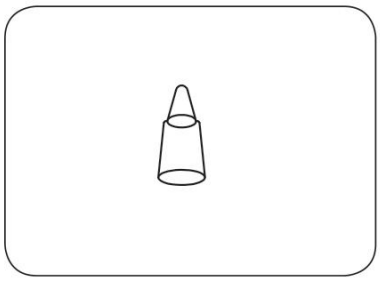

Silicon oil x 1

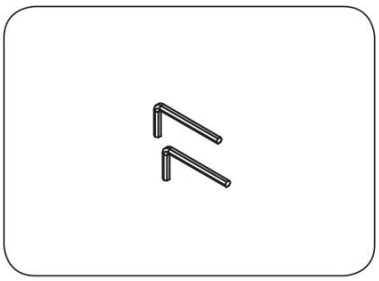

Wrench 5# / 6# x 2

ASSEMBLY INSTRUCTIONS

STEP 1

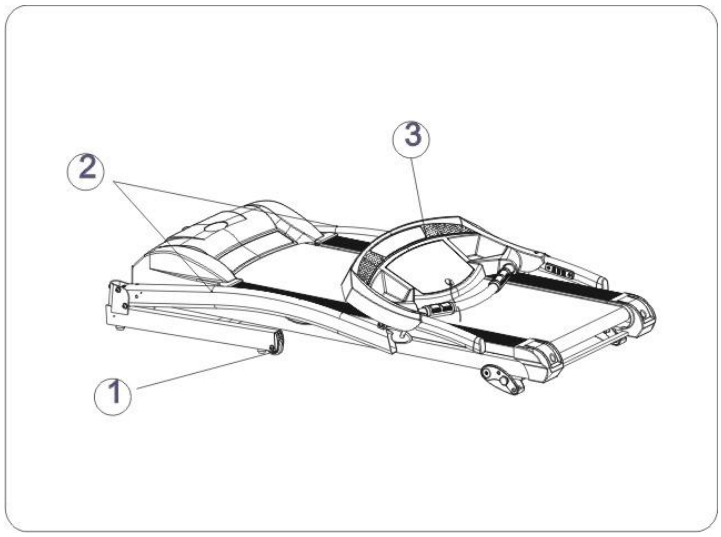

1. Open the packing carton, put the main frame on the level ground.

STEP 2

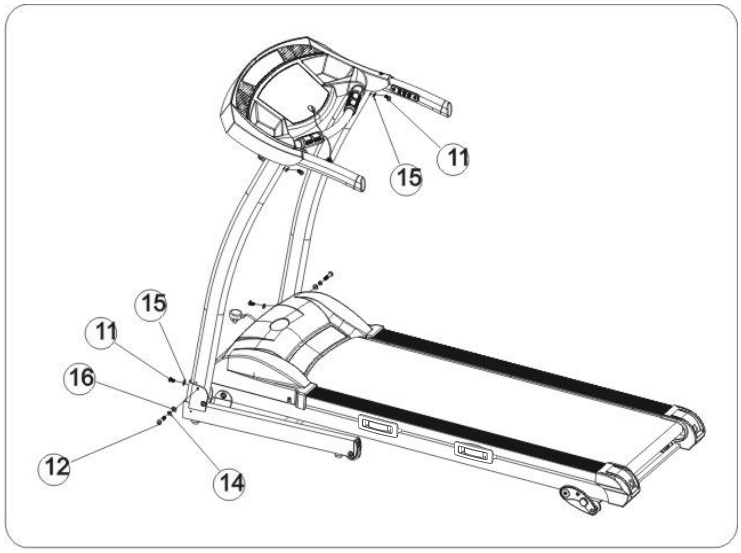

1. Lift up the left and right upright (2) with the computer until not move show as the picture. At the same time, be careful not to damage the cables inside left and right upright (2)。
2. Use the 5# wrench (21) to fasten the right/left upright onto the base (1) with each 2pcs M8X45 bolt (12), M8X15 bolt (11), M8 spring washer (16), M8 washer (15) and washer (14).
3. Connect the console onto the right and left upright, then use the 5# wrench (21) to fasten with bolt (11) and washer (15) on each side.

ASSEMBLY INSTRUCTIONS

STEP 3

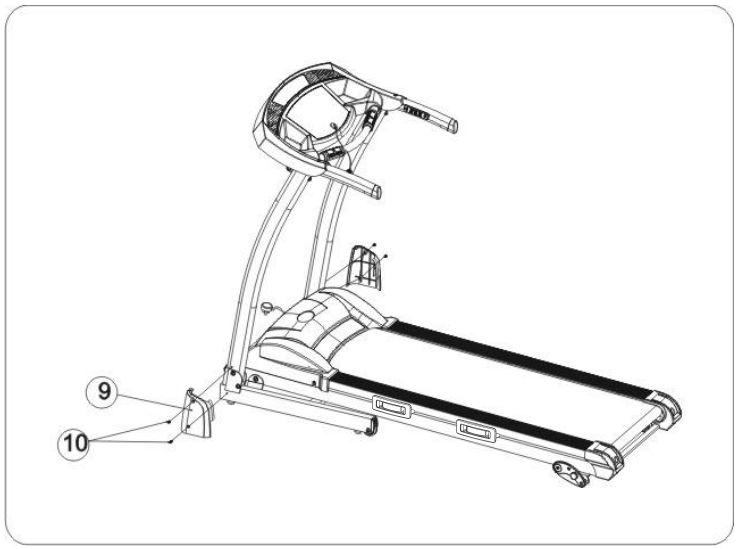

1. Fasten the right and left base cover (9) onto base (1) with M4*15 screw (10).

STEP 4

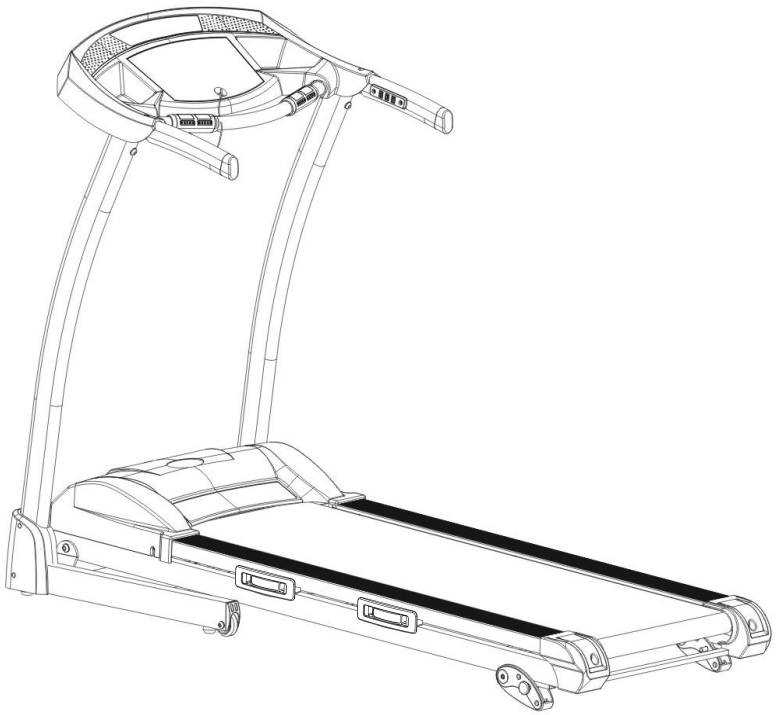

NOTE: For your safety and comfort, please check if all screws are fastened
Congratulation! A brand new motorized treadmill has been successful assembled!

OPERATION GUIDE

GENERAL SAFETY TIPS

A. Practice mounting and dismounting your treadmill before beginning your workout.
B. Attach the Safety Key to the Computer (the treadmill will not operate without the Safety Key). Clip the other end of the Safety Key to your clothing before exercising to ensure the treadmill will stop if the user accidentally walks off the Treadmill.
C. If the user falls off the Treadmill, the Safety Key will come off the Computer and the treadmill will stop at once to avoid further injury.
D. Do not stand on the Walking Belt while starting the Treadmill. Straddle the Belt and stand on the plastic Foot Rails.
E. The Treadmill will start at 1.0KM/H after a 3,2,1 countdown. If you are a new user, stay at a slow speed and hold onto the Hand Grips until you become comfortable.

QUICK REFERENCE GUIDE

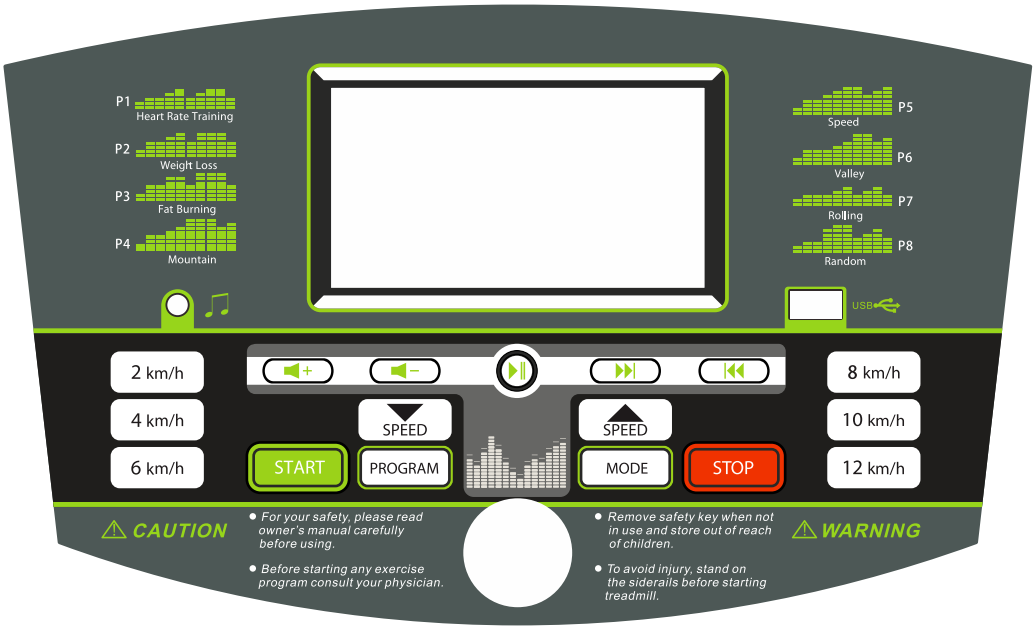

DISPLAY FUNCTION

DISTANCE: Accumulates total workout distance from 0.5 to 99.5 kilometers.
CALORIE: Accumulates the user's calorie consumption during exercise. Max. Value is 999 KCal.
TIME: Accumulates total workout time from 5:00 to 99:00 minutes.
PULSE: When pulse is detected by grasping both stainless steel pick-ups on front handrails, it will display your current heart rate in beats per minute from 50 to 200.
SPEED: Displays the current belt speed from starting at 1.0Km/h to 16.0Km/h. The speed

window will display H-1, H-2, H-3 during setting of manual program.
When the safety key is not on position, the entire LCD screen will display E07 only.

OPERATION GUIDE

GETTING STARTED

NOTES:

1. Check to make sure nothing is on or will hinder the movement of the treadmill.
2. Plug in the power cord and turn the treadmill ON, the LCD will display E07.
3. Stand on the foot rails of the treadmill.
4. Attach the safety key clip to part of your clothing.
5. Put the safety key into the safety key hole in the console, and then the treadmill will be on start/ready status.
6. There are three buttons on both handrail, right is STOP and SPEED +/-, left is START and SPEED +/- , and it will perform same functions as STOP, START and SPEED +/- buttons on the computer.
7. During your workout in any mode, when you press STOP button, the treadmill will be stop and get back to start/ready status.
8. You have two options to start your workout:
A.QUICK START
Simply press the START button to begin working out.
B.SELECT A PROGRAM
Select manual program by pressing MODE button or pressing PROGRAM buttons to enter 8 preset programs.

QUICK-START OPERATION

STEP 1: Attach the Safety key to wake display up; the treadmill then will be on start/ready status.
STEP 2: Press the START button to begin belt movement after a three second count-down. Use the FAST and SLOW buttons to adjust the desired speed at any time during training, or DIRECT SPEED buttons to jump directly to a desired speed. The speed can also be adjusted by the buttons on both handrail.
STEP 3: To get a pulse reading, simply grasp stainless steel pick-ups on front handrails. It may take a few seconds for the display to reach the actual number. The pulse rate will be displayed on PULSE window.
STEP 4: Press STOP button to stop your workout or pull safety key away from its position to shut down the computer, the SPEED window will show E 07 after you pull off the safety.
STEP 5: During quick-start operation, TIME, CALORIE and DISTANCE will count up.

MANUAL PROGRAMS OPERATION

NOTES:

Under this program, one of DISTANCE, CALORIE and TIME shall be set count-down for your workout, the others will count up during your workout, after one count-down reach zero, program will be ended and stop the belt movement, if you

need to continue, press the START button to begin belt movement after a three second count-down.

OPERATION GUIDE

STEP 1: Attach the Safety key to wake display up; the treadmill then will be on start/ready status.
STEP 2: Press MODE button, the manual program will be selected, SPEED window will display H-1, TIME window will blink in and display 30:00, press FAST and SLOW button to set count-down TIME from 10:00 minutes to 99:00 minutes.
If you do not like to set TIME for count-down and pass to others, then DO NOT PRESS FAST AND SLOW button to set TIME, but directly press MODE again, the SPEED window will display H-2, DISTANCE window will blink and display 5.0, press FAST and SLOW button to set count-down DISTANCE from 1.0KM-99.0KM
If you do not like to set DISTANCE for count-down and pass to others, then DO NOT PRESS FAST AND SLOW button to set DISTANCE, but directly press MODE again, the SPEED window will display H-3, CALORIE window will blink and display 10, press FAST and SLOW button to set count-down CALORIE from 5 KCAL – 999 KCAL.
STEP 3: After finishing setting count-down for your workout, press START to begin belt movement after a three seconds count-down.
STEP 4: During the program you can adjust the speed by pressing FAST and SLOW button, or use DIRECT SPEED buttons to jump directly to a speed. The speed can also be adjusted by the buttons on both handrails. Press STOP button will stop the treadmill and the treadmill will get back to start/ready status.

PRESET PROGRAMS OPERATION

NOTES:
All the preset programs are made up with 10 time-based segments; the speed is preset on each segment. The elapse time of 10 segments on each program will be automatically arranged according to the time you set for your workout time.
Step1: Attach the safety key to wake the display up; the treadmill then will be on start/ready status.
Step2: Press PROGRAM button to scroll through the 8 preset programs, a program will be selected once you press PROGRAM button, the program number P1-P8 will be displayed on SPEED window, and then TIME will be blink for setting, after selecting a program, then turn to set the elapse time of each program.
STEP 3: The pre-set value of elapse time of each program is **30**:00 minutes, and it can be set from 10:00 to 99:00 minutes. Press FAST and SLOW buttons to modify, and press START button to accept and begin your workout.
STEP 4: During procession of program you can adjust the SPEED by pressing FAST and SLOW buttons or use DIRECT SPEED jump directly to a setting. The speed can also be adjusted by the buttons on both handrails. However, the SPEED you adjust will only be effective on the ongoing segment, after the segment finished, the SPEED will process with preset values.
STEP 5: Press STOP button to stop the treadmill or pull safety key away from its position

to shut down the computer, the SPEED window will show E 07 after you pull off the safety.

PRESET PROGRAM CHART

Each program divided moving time into 10 segments; the speed on each segments have been pre-set in the factory.

Program	SEG	1	2	3	4	5	6	7	8	9	10
P1	Speed	2	3	3	4	5	3	4	5	5	3
P2	Speed	2	4	4	5	6	4	6	6	6	4
P3	Speed	2	4	4	6	6	4	7	7	7	4
P4	Speed	3	5	5	6	7	7	5	7	7	8
P5	Speed	2	4	4	5	6	7	7	5	6	7
P6	Speed	2	4	4	4	5	6	8	8	6	7
P7	Speed	2	3	3	3	4	5	3	4	5	3
P8	Speed	2	3	3	6	7	7	4	6	7	4

USING THE PULSE FUNCTION

The Pulse Window on your Computer works in conjunction with the Pulse Sensors on both handrails. When you are ready to read your pulse:

1. Place both hands firmly on the Pulse Sensors. For the most accurate reading, it is important to use both hands.
2. Your estimated heart rate will display in the PULSE window approximately 6 seconds after you grasp the Pulse Sensors.
3. This estimate is not exact and persons with medical conditions and/or a specific need for accurate heart rate monitoring should not rely on the estimations provided.

USING THE AUDIO FUNCTION

As the figure shows, plug one end of the audio cable to the audio jack on computer, and then plug the other end of the audio cable to MP3 player.
The speaker on the computer will then play the music from MP3 player.
The volume of speaker can only be adjusted by MP3 player.

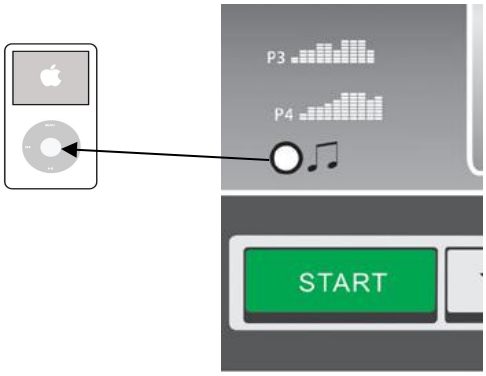

BODY FAT SCALE

This function is to estimate your body fat according to the basic information of you body condition.
This estimate is not exact and persons with medical conditions and/or a specific need for accurate body fat value should not rely on the estimations provided.
STEP 1: Attach the Safety key to wake display up; the treadmill then will be on start/ready status.
STEP 2: Press PROGRAM button repeatedly, on the “9” time pressing PROGRAM button, the computer will start performing BODY FAT analyzing function. The relative parameter is GENDER, AGE, HEIGHT, and WEIGHT.
STEP 3: After entering BODY FAT function, the PULSE window will display 2, which represents GENDER, 1 represents MALE, 2 represents FEMAL, press FAST and SLOW button to set GENDER. Then press MODE button to go to next step.
STEP 4: After pressing MODE button, the TIME window will blink and display 35, it represents AGE, press FAST and SLOW button to set ages from 10 - 99. Then press MODE button to go to next step.
STEP 5: After pressing MODE button, the DISTANCE window will blink and display 170, which represents Height of user, press FAST and SLOW button to set Height from 50CM to 250CM. Then press MODE button to go next step.
STEP 6: After pressing MODE button, the CALORIE window will blink and display 60, which represents Weight of user; press FAST and SLOW button to set Weight from 20KG to 200KG.
STEP 7: After finished setting all the necessary information of your body condition, press START button, the PULSE window will then display “---”, and SPEED window display 0, it means the computer start to work for calculating, then hold the pulse sensor on handrail with both of your hands, around 6 seconds after, the body fat result will be displayed on SPEED window, and the PULSE window will display PULSE value.

BODY FAT CHART

The result that given by body fat scale can be a reference of body condition, check your body condition according to the left chart with the result you get from the treadmill.

Body condition	Male	Female
Fat	<14	<17
Fit	14-23	17-27
Thin	>23	>27

HOW TO FOLD AND MOVE

HOW TO FOLD THE TREADMILL

Before folding the treadmill, adjust the incline to the lowest position. If this is not done, the treadmill may be permanently damaged. Next, unplug the power cord.
CAUTION: You must be able to safely lift 45 pounds (20kg) in order to raise, lower, or move the treadmill.

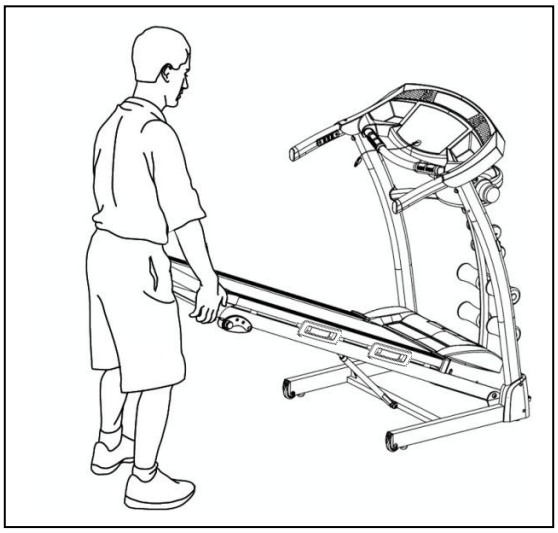

1. Hold the treadmill with your hands in the locations shown at the right. **CAUTION: To decrease the possibility of injury, bend your legs and keep your back straight. As you raise the treadmill, make sure to lift with your legs rather than your back.** Raise the treadmill until the running deck is firmly held by the cylinder as the figure A-1 shows.

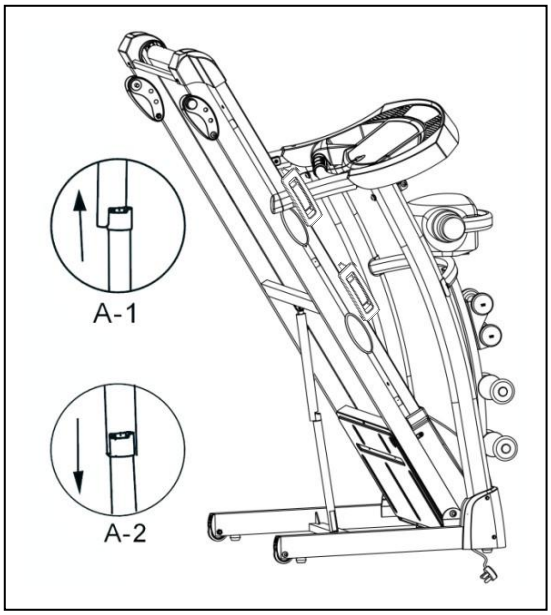

2. If you want to put the treadmill to the work position, please lift the end of main fame (end cap) a little to make the foldaway support tube higher than the cylinder cover (see figure A-1), tip the foldaway support tube with your foot slightly, press the end of main fame forcibly, remove your foot and keep on pressing the end of main fame for a while.
The cylinder will shrink under the weight of itself (see figure A-2) and the main fame goes flat.

HOW TO MOVE THE TREADMILL

Before moving the treadmill, convert the treadmill to the storage position as described above. **Make sure that the cylinder is securely held by the tube.**

1. Hold the handrails as shown and place one foot against a wheel.
2. Tilt the treadmill back until it rolls freely on the wheels. Carefully move the treadmill to the desired location.
Never move the treadmill without tipping it back. To reduce the risk of injury, use extreme caution while moving the treadmill. Do not attempt to move the treadmill over an uneven surface.
3. Place one foot on a wheel, and carefully lower the treadmill until it is resting in the storage position.

SUGGESTED STRETCHES

A successful exercise program consists of a warm-up, aerobic exercise, and a cool-down. Do the entire program at least two and preferably three times a week, resting for a day between workouts. After several months, you can increase your workouts to four or five times per week.
Warming up is an important part of your workout, and should begin every session. It prepares your body for more strenuous exercise by heating up and stretching out your muscles, increasing your circulation and pulse rate, and delivering more oxygen to your muscles. At the end of your workout, repeat these exercises to reduce sore muscle problems. We suggest the following warm-up and cool-down exercises:

1. Inner Thigh Stretch

Sit with the soles of your feet together with your knees pointing outward. Pull your feet as close into your groin as possible. Gently push your knees towards the floor. Hold for 15 counts.

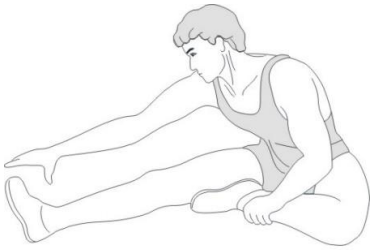

2. Hamstring Stretch

Sit with your right leg extended. Rest the sole of your left foot against your right inner thigh.
Stretch toward your toe as far as possible.
Hold for 15 counts. Relax and then repeat with left leg extended.

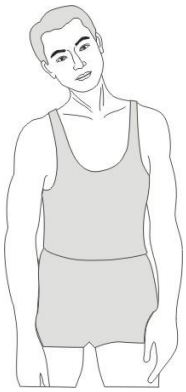

3. Head Roll

Rotate your head to the right for one count, feeling the stretch up the left side of your neck.
Next, rotate your head back for one count, stretching your chin to the ceiling and letting your mouth open. Rotate your head to the left for one count, and finally, drop your head to your chest for one count.

SUGGESTED STRETCHES

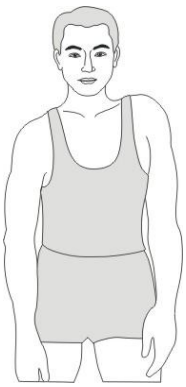

4. Shoulder Lift

Lift your right shoulder up toward your ear for one count. Then lift your left shoulder up for one count as you lower your right shoulder.

5. Toe Touch

Slowly bend forward from your waist, letting your back and Shoulders relax as you stretch toward your toes.
Reach down as far as you can and hold for 15 counts.

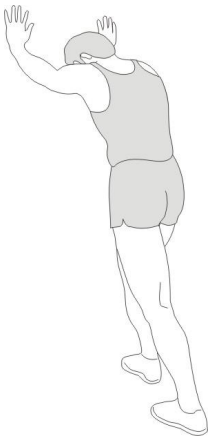

6. Calf-Achilles Stretch

Lean against a wall with your left leg in front of the right and your arms forward. Keep your right leg straight and the left foot on the floor; then bend the left leg and lean forward by moving your hips toward the wall. Hold, and then repeat on the other side for 15 counts.

7. Side Stretch

Open your arms to the side and continue lifting them until they are over your head.
Reach your right arm as far upward toward.
The ceiling as you can for one count.
Feel the stretch up your right side.
Repeat this action with your left arm.

MAINTENANCE

WARNING! Before performing any maintenance to your treadmill, always unplug the power cord from the surge protector.

CLEANING: Routine cleaning of your TREADMILL will extend the life of your treadmill.

WARNING! To prevent electrical shock, be sure the power to the treadmill is OFF and the unit is unplugged from the wall electrical outlet before attempting any cleaning or maintenance.

AFTER EACH WORKOUT: Wipe off the console and other treadmill surfaces with a clean, water dampened soft cloth to remove excess perspiration. **USE NO CHEMICALS.**

WEEKLY: Use of a treadmill mat is recommended for ease of cleaning. Dirt from your shoes contacts the belt and eventually ends up underneath the treadmill. Vacuum underneath the treadmill once a week.

DECK LUBRICATION: The walking belt has been pre-lubricated at the factory. However, it is recommended that the walking board be checked periodically for lubrication to ensure optimal treadmill performance. Every 10 days or 10 hours of operation, lift the sides of the walking belt and feel the top surface of the walking board as far under as you can reach. If you feel signs of silicone, no further lubrication is required. If it feels dry to the touch, lubrication is needed. Ask your retailer or call Service line for the type of silicone.

TO APPLY LUBRICANT TO THE WALKING BOARD

1) Position the walking belt so that the seam is located on top and in the center of the center of the walking board.
2) Insert the spray nozzle into the spray head of the lubricant can.
3) While lifting the side of the walking belt, position the spray nozzle between the walking belt and the board approximately 10cm from the front of the treadmill. Apply the silicone spray to the walking board, moving from the front of the treadmill to the rear. Repeat this on the other side of the belt. Spray approximately 4 seconds on each side.
4) Allow the silicone to 'set' for one minute before using the treadmill.

WARNING: Do not over-lubricate the walking board. Excess lubricant should be wiped off with a clean towel.

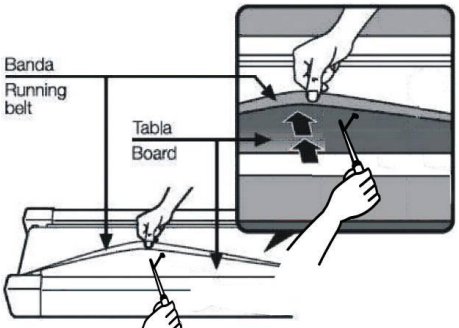

Running belt tension adjustment

The treadmill has been adjusted and passed QC inspection before leaving the factory. If there is phenomenon of bias running of the belt ,the possible reasons might be:

A. The frame is not stably laid

B. The user is not running on the centre of the running belt;

C. The user's two feet are not using even strength.

For bias which can not be fixed automatically, try the following methods to fix the belt, as picture shown

If the belt tends to move to the right, you should turn the belt adjustment screw on the right in clockwise direction. We recommend you turn 1/4 turn each time and check how it works. If the belt remains slanting to the right ,then turn the belt adjustment screw on the left in counterclockwise direction 1/4,as shown in the picture A

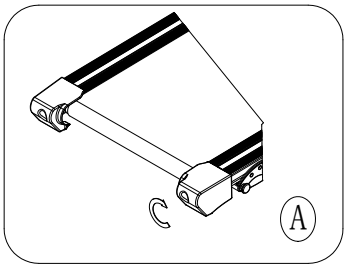

If the belt tends to move to the left, then turn the belt adjustment screw on the left in clockwise direction for 1/4 turn. If the belt remains slanting to the left ,then turn the belt adjustment screw on the right in counterclockwise direction for 1/4 turn, as shown in the picture B

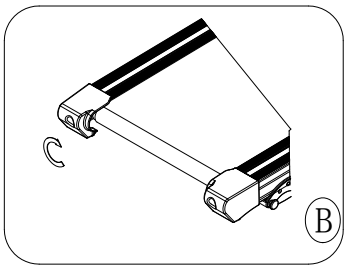

After having been used for a period, the belt might be slightly elongated, and slipping and halting might appear when a person is running on it. When these phenomena appear, you should secure the screws on both sides for 1/4 turn. If the belt is too tight, just loosen the screw on both sides for 1/4 turn, as shown in picture C.

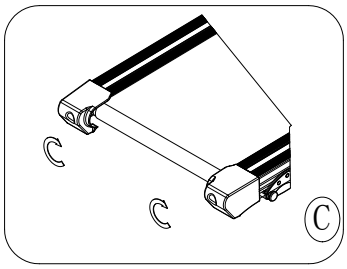

EXPLODED DRAWING

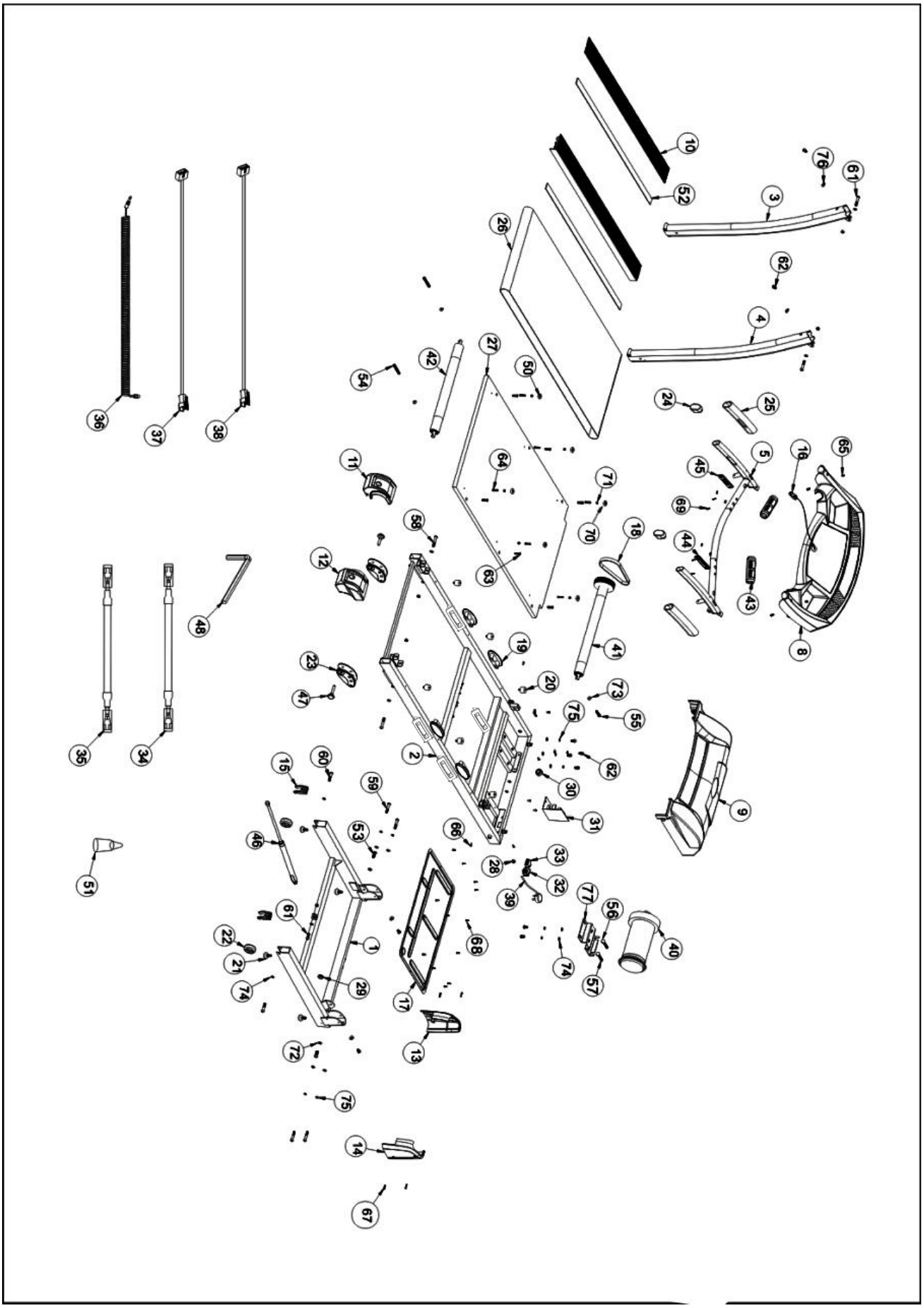

PART LIST

No.	Description	Qty
1	Base	1
2	Main frame	1
3	Left upright	1
4	Right upright	1
5	Handrail rack	1
6		
7		
8	Console	1
9	Motor cover	1
10	Foot rail	2
11	Rear end cap Left	1
12	Rear end cap Right	1
13	Base cover Left	1
14	Base cover Right	1
15	Base end cap	2
16	Safety key	1
17	Belly pan	1
18	Motor belt	1
19	Gel cushion	4
20	Rubber cushion	6
21	Base foot	4
22	Moving wheel	2
23	Manual incline kit	2
24	Handrail cap	2
25	Handrail foam	2
26	Running belt	1
27	Wooden board	1
28	Power cord grommet	1
29	Cable grommet	1
30	Magnetic ring	1
31	Controller	1
32	Power switch	1
33	Circuit breaker	1
34	Controller wire	1
35	Controller wire	1
36	Audio cables	1
37	Cables	1
38	Cables	1
39	Power cord	1
40	Motor	1
41	Front roller	**1**
42	Rear roller	1
43	Handrail pulse kit	2

No.	Description	Qty
44	Handrail button kit Left	1
45	Handrail button kit Right	1
46	Air cylinder	1
47	Manual incline lock pin	2
48	Wrench	1
49		
50	Foot rail fastener	6
51	Lubricant oil bottle	1
52	Foot rail cushion	2
53	Bolt M10x25	2
54	Bolt M8x65	2
55	Bolt M8x35	1
56	Bolt M8x35	1
57	Bolt M8x30	1
58	Bolt M8x50	2
59	Bolt M8x50	4
60	Bolt M8x40	2
61	Bolt M8x25	4
62	Bolt M8x15	10
63	Bolt M6x20	6
64	Screw M5x28	6
65	Screw T4.2x15	7
66	Screw M5x15	9
67	Screw M4x12	22
68	Screw T4.2x12	11
69	Screw M3x15	4
70	Nut M8	10
71	Nut M5	6
72	Washer M10	2
73	Washer M8	12
74	Washer M8	15
75	Washer	10
76	Washer	6
77	Motor base	1

TROUBLE SHOOTING

ERROR CODE	POSSIBLE CAUSES	CORRECTION
E1	Defection on speed sensor.	Check whether the speed sensor is installed well, whether the sensor is broken, and whether the distance between sensor and roller is in 3-5MM.
E2	Overload or over voltage protected.	Switch off the power and switch on the power again.
E3	Over current protected	Switch off the power and switch on the power again.
E4	Defection on motor	1. Check cable connection between motor and controller. 2. Check whether the motor is broken.
E6	Defection on the cables between computer and controller	Check whether the upright cables are well-connected;
E7	Safety key off	Attached the safety key correctly.
E0P	Error on controller proofreading with motor.	Contact your dealers to solve the problem

TROUBLE SHOOTING

PROBLEM	POSSIBLE CAUSES	CORRECTION
Treadmill will not start	1. Not plugged in. 2. Safety key not attached correctly. 3. Treadmill circuit breaker tripped. 4. On/Off switch not turned on. 5. Auto shut down timed out.	1. Tighten into suitable outlet. 2. Insert safety pull pin. 3. Reset circuit breaker. 4. Turn on On/Off switch. 5. Unplug and re-plug electrical cord.
Treadmill belt slipping	1. Walking belt too loose. 2. Deck needs lubrication.	1. Tighten walking belt. 2. Lubrication belt and deck.
Treadmill noisy	1. Loose hardware. 2. Motor straining. 3. Clicking sound-roller knocking.	1. Tighten visible screws, nuts and bolts. 2. Check the belt tension-3 finger test. 3. Adjust rear rollers-check the tension.
Inaccurate pulse rate	1. Too much hand movement. 2. Palms too wet. 3. Gripping handgrips too tight. 4. Wearing rings.	1. Stand on the side rails to obtain accurate pulse reading. 2. Dry palms. 3. Grip using moderate pressure. 4. Remove all rings.